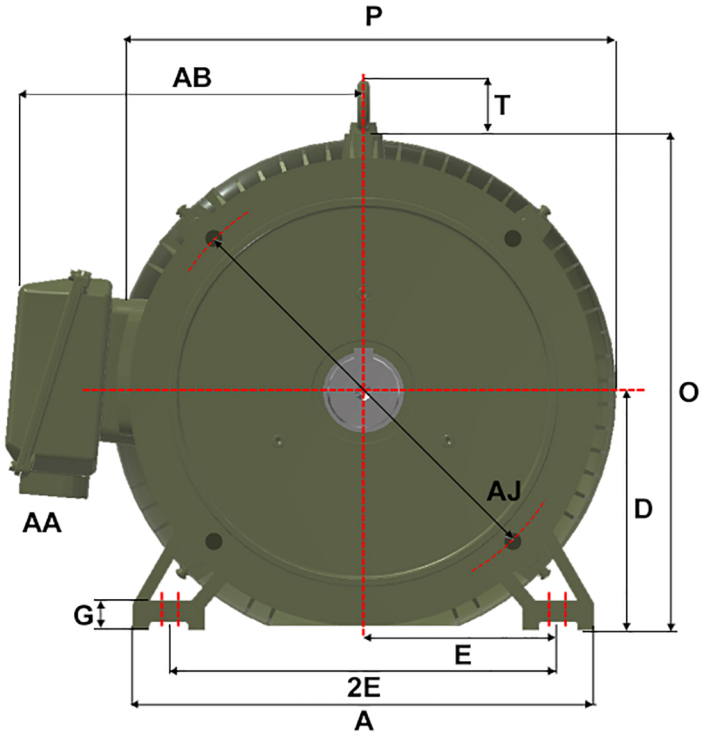

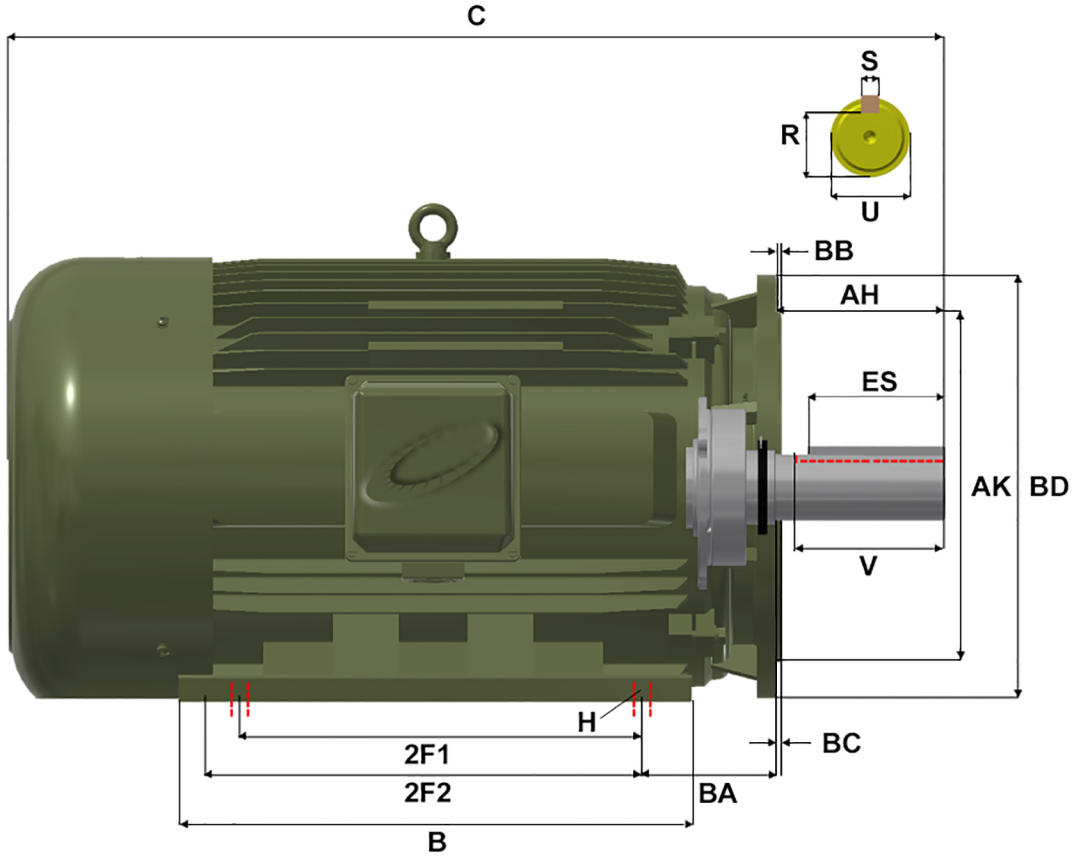

Version: 2WTI			Revised: 08-10-2019			HP	RPM	FRAME	ENCLOSURE	MPP/MQP-73D			
Customer is responsible in determining that MEP product will fit/perform suitably in the intended application						75	1200	405TD	TEFC				
A	B	C	D	E	2E	2F1	2F2	G	H	O	P	R	S
19.30	17.90	38.00	10.00	8.00	16.00	12.25	13.75	1.18	6 * 0.81	19.80	19.10	2.450	0.750
T	U	V	AA	AB	AH	AJ	AK	BA	BB	BC	BD	ES	
2.60	2.875	7.00	3 NPT	15.60	7.25	20.00	18.00	6.62	0.25	0.00	22.00	5.65	